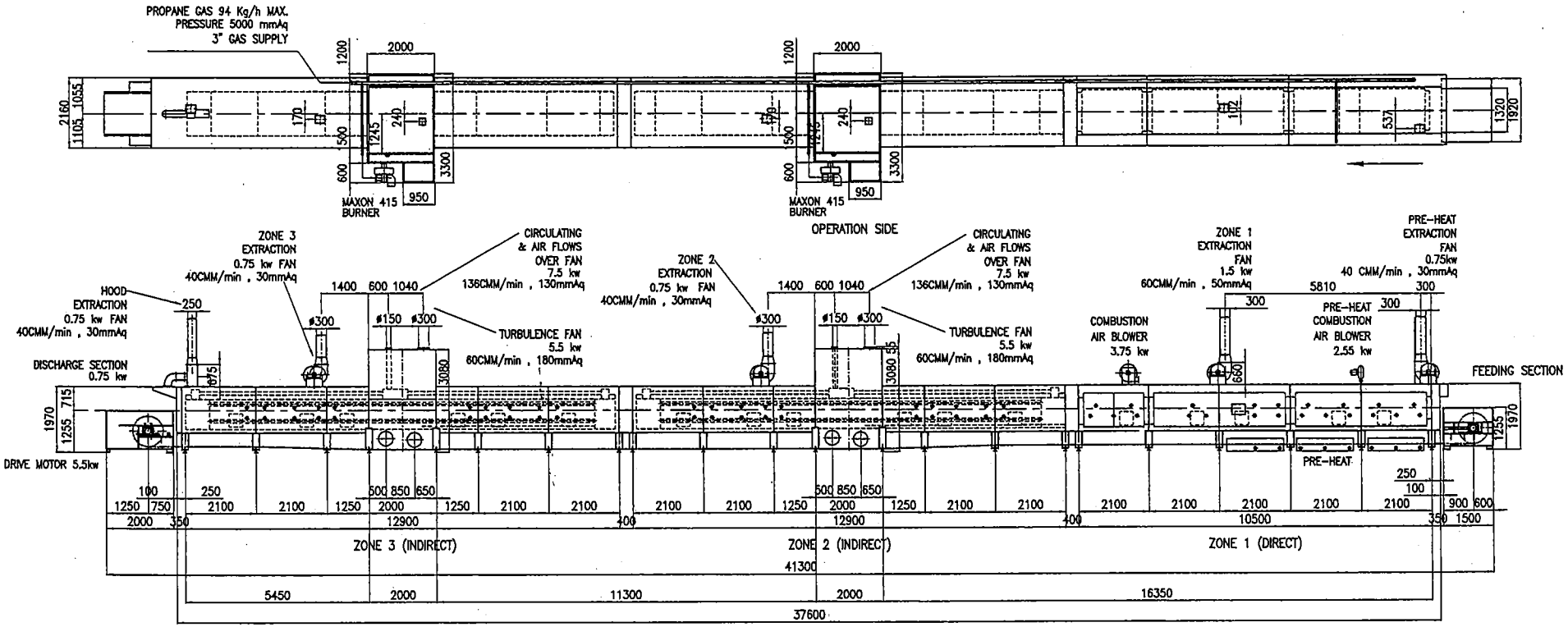

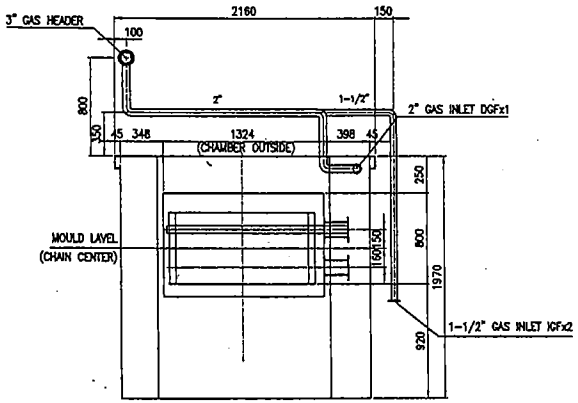

* LPG-PRIMARY PRESSURE 5000mmAq (MAX.8000mmAq)
* ELECTRIC POWER (3 x 460V + N + PE - 60HZ)

SPECIFICATIONS
DIRECT HEATING SECTION
-LENGTH 10.6M
-NUMBER OF ZONES 1
-FUEL LPG.MAX- 31kg/h
-TOTAL NUMBER OF BURNERS 23 , PRE-HEAT 8
-TOTAL OUTPUT MAX. 372,000 kcal/h
-NUMBER OF DRAFT STEAM CHIMNEYS 2
-CATERPILLAR CHAIN(PITCH:100,TOOTH:28)

SPECIFICATIONS
* INDIRECT HEATING SECTION
-LENGTH 26M
-NUMBER OF ZONES 2
-FUEL LPG.MAX-63kg/h
-BURNER TYPE MAXON 415
-TOTAL NUMBER OF BURNERS 2
-SINGLE BURNER OUTPUT MAX. 375.000 Kcal/h
-TOTAL OUTPUT MAX. 750.000 kcal/h
-NUMBER OF DRAFT STEAM CHIMNEYS 7
-COMBUSTION AIR MIN.150mmAq , MAX. 750mmAq
-COMPRESSOR AIR - USED CLEAN ONLY

LAYOUT OF POTATO CHIP'S BAKING OVEN	DRAWING NAME		MATE.		QUANTITY	08.01.08	DATE	FINISH	DONG YANG FOOD MACHINERY CO.,LTD
	DRAWING NO		SCALE	Y.S.CHOI	DESIGN		FILE NO		